DRAWING LIST FOR TEST PACKAGE

POW-646

PROJECT NO.: 22328D

PROJECT TITLE : M15X Ph2 Project

No	PKG No	UNIT	LINE NUMBER			P&ID		REMARK
			ISO DRAWING No	SHEET	REV	P&ID No	REV	
1	646	1FA	15A-POW-ST1-C-7002-01	1 OF 1	1	CJ-M15W13-PR-A20-000080	2	
2	646	1FA	15A-POW-ST1-C-7003-01	1 OF 1	1	CJ-M15W13-PR-A20-000080	2	
3	646	1FA	15A-POW-ST1-C-7004-01	1 OF 1	1	CJ-M15W13-PR-A20-000080	2	
4	646	1FA	50A-POW-ST1-C-7005-01	1 OF 1	0	CJ-M15W13-PR-A20-000080	2	
5	646	1MF	50A-POW-ST1-C-7005-01	1 OF 1	0	CJ-M15W13-PR-A20-000080	2	
6	646	2FA	50A-POW-ST1-C-7005-01	1 OF 2	0	CJ-M15W13-PR-A20-000080	2	
7	646	2FA	50A-POW-ST1-C-7005-02	2 OF 2	0	CJ-M15W13-PR-A20-000080	2	

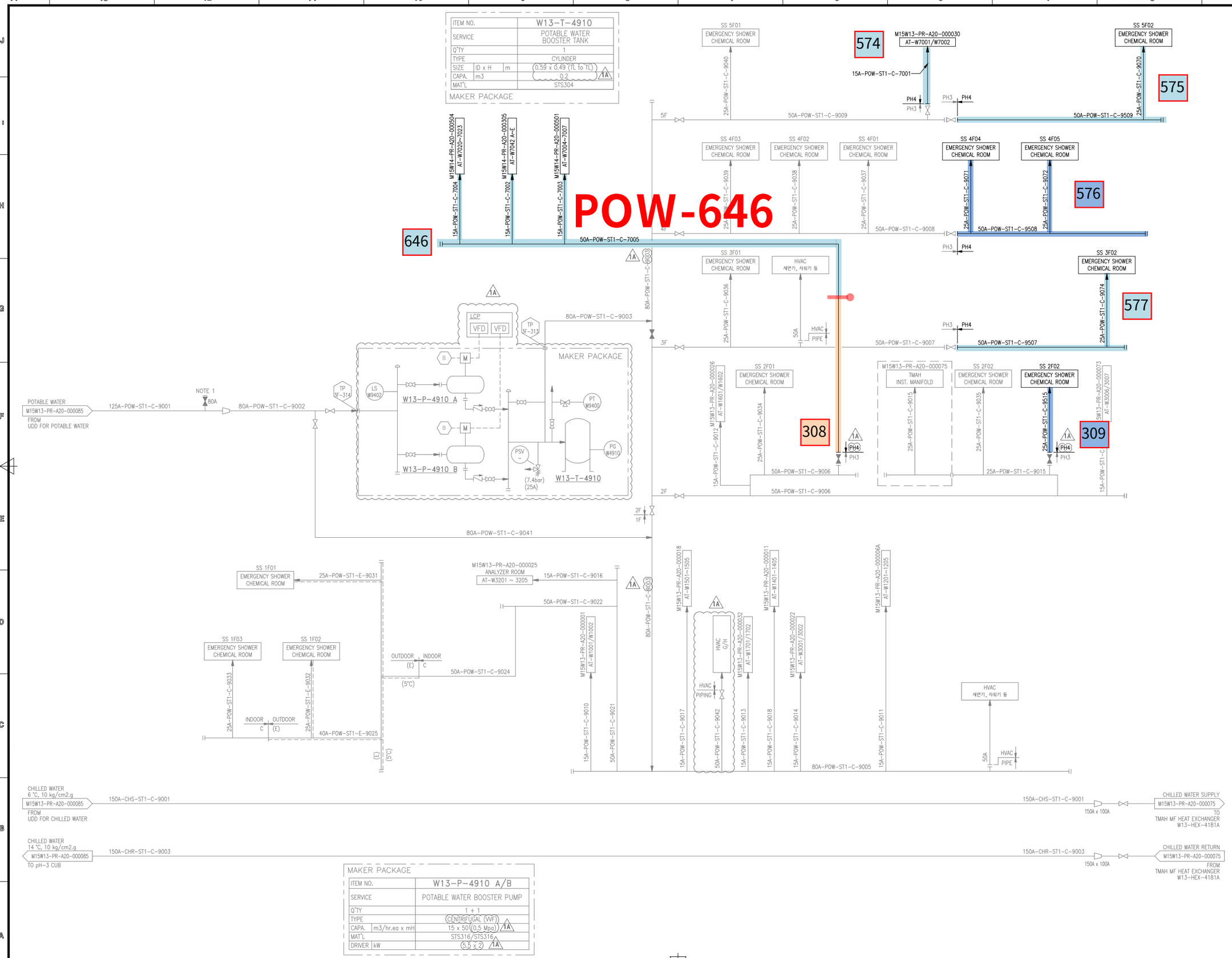

MAKER PACKAGE	
ITEM NO.	W13-T-4910
SERVICE	POTABLE WATER BOOSTER TANK
Q'TY	1
TYPE	CYLINDER
SIZE ID x H m	0.59 x 0.49 (TL to TL) 1A
CAPA. m3	0.2
MAT'L	STS304

MAKER PACKAGE	
ITEM NO.	W13-P-4910 A/B
SERVICE	POTABLE WATER BOOSTER PUMP
Q'TY	1 + 1
TYPE	CENTRIFUGAL (VVF)
CAPA. m3/hr.ea x mH	15 x 50 (0.5 Mpa) 1A
MAT'L	STS316/STS316
DRIVER kW	5.5 x 2 1A

대외비

KEY PLAN (3F)

NOTE
1. FOR FUTURE CONNECTION NOZZLE.
2. 비상세척설비 관련 MONITORING SYSTEM 구축할 것. (VALVE 작동 시 응앙방제실로 신호 전송하여 위치 표시와 ALARM 경보음 발생, SCOPE BY SK HYNIX)

REV.	DESCRIPTION	DATE
1A	REVISED AFC	25.08.14
1	REVISED AFC	25.01.17
0	APPROVAL FOR CONSTRUCTION	24.09.30

제 도 DRAWN BY	이 인 학
검 토 CHECKED BY	한 진 희
승 인 APPROVED BY	박 동 영
제 작 사	SK 에코플랜트
공 사 명 PROJECT TITLE	M15X Ph4 WWT Project
PROJECT NO.	22330D

REV.	DESCRIPTION	DATE
2	REVISED AFC	24.06.21
1	REVISED AFC	23.02.28
0	APPROVAL FOR CONSTRUCTION	22.09.23

제 도 DRAWN BY	한 진 희
검 토 CHECKED BY	심 문 용
승 인 APPROVED BY	박 동 영
제 작 사	SK 에코플랜트
공 사 명 PROJECT TITLE	M15X Ph3 WWT Project
도면명 DWG. TITLE	UTILITY DISTRIBUTION DIAGRAM POTABLE/CHILLED WATER SUPPLY SYSTEM
축 척 SCALE	NONE
날 짜 DATE	2024. 06. 21
PROJECT NO.	22330D
도면번호 SHEET NO.	CJ-M15W13-PR-A20-000080
REV.	2

A1(594x841mm ±2mm)

C:WUsersWTOPWDesktopWP&ID251013W[M15X Ph-4 for 인허가]CAD FILE_0910WCJ-M15W13-PR-A20-000080 R1 UDD FOR POTAB

POW-646

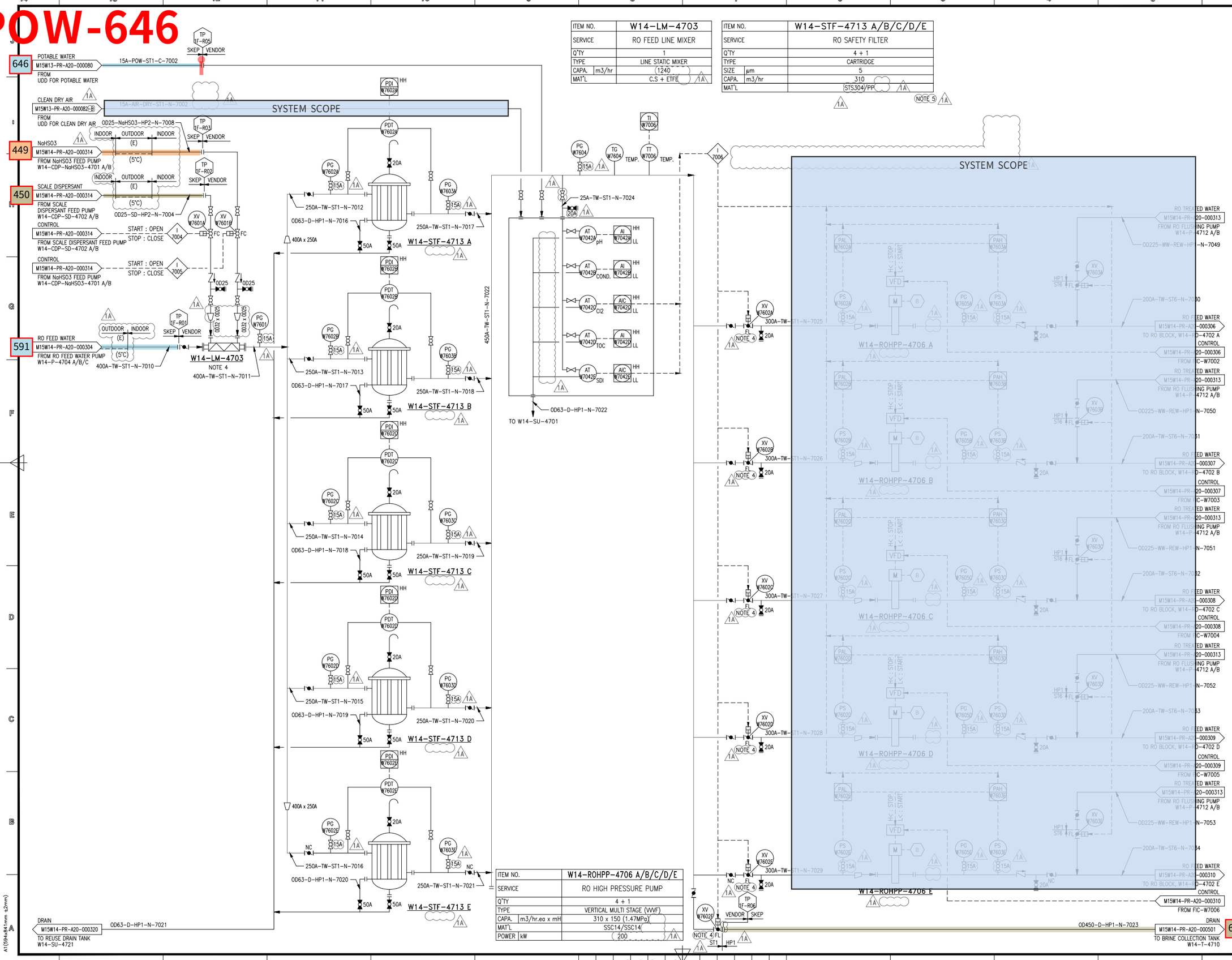

ITEM NO.	W14-LM-4703
SERVICE	RO FEED LINE MIXER
Q'TY	1
TYPE	LINE STATIC MIXER
CAPA. m3/hr	1240
MAT'L	C.S + ETFE

ITEM NO.	W14-STF-4713 A/B/C/D/E
SERVICE	RO SAFETY FILTER
Q'TY	4 + 1
TYPE	CARTRIDGE
SIZE μm	5
CAPA. m3/hr	310
MAT'L	STS304/PP

ITEM NO.	W14-ROHPP-4706 A/B/C/D/E
SERVICE	RO HIGH PRESSURE PUMP
Q'TY	4 + 1
TYPE	VERTICAL MULTI STAGE (WVF)
CAPA. m3/hr.ea x mH	310 x 150 (1.47MPa)
MAT'L	SSC14/SSC14
POWER kW	200

대외비

KEY PLAN (1F)

NOTE

1. 2m 이상 높은 곳에 설치된 밸브는 CHAIN VALVE 또는 PLATFORM 구성할 것.
2. 운전시 CLOSE 되는 배관에는 LOTO 설치.
3. CENTRIFUGAL PUMP MAT'L 표기 : CASING / IMPELLER
4. 50A 이상 모든 XV SPPED CONTROLLER (ACCESSORY) 설치.
5. FILTER ELEMENT 수량 : 110EA/Train

수정 REV.	설명 DESCRIPTION	날짜 DATE
1A	REVISED AFC	25.08.14
1	REVISED AFC	25.01.17
0	APPROVAL FOR CONSTRUCTION	24.10.31

제도 DRAWN BY	이 인 학
검토 CHECKED BY	한 진 희
승인 APPROVED BY	박 동 영
제작사	SK 에코플랜트
공사명 PROJECT TITLE	M15X Ph4 WWT Project
도면명 DWG. TITLE	PIPING & INSTRUMENT DIAGRAM SAFETY FILTER & HIGH PRESSURE PUMP
축척 SCALE	NONE
날짜 DATE	2025. 08. 14
PROJECT NO.	22330D
도면번호 SHEET NO.	CJ-M15W14-PR-A20-000305
REV.	1A

C:₩Users₩TOP₩Desktop₩P&ID251013₩[M15X Ph-4 for 인허가]CAD FILE_0910₩CJ-M15W14-PR-A20-000305 R1 P&ID FOR SAFET

ITEM NO.		W14-T-4710
SERVICE		BRINE COLLECTION TANK
Q'TY		1
TYPE		RECTANGULAR
SIZE	W x L x H m	(14.5) x 5.775 x 7.05 (EH 7.05) 5.0 x 5.3 x (14.05 (EH 12.55)
CAPA.	m3	(963 (EH 923))
HRT	hr	2.5
MAT'L		P.C + FRP

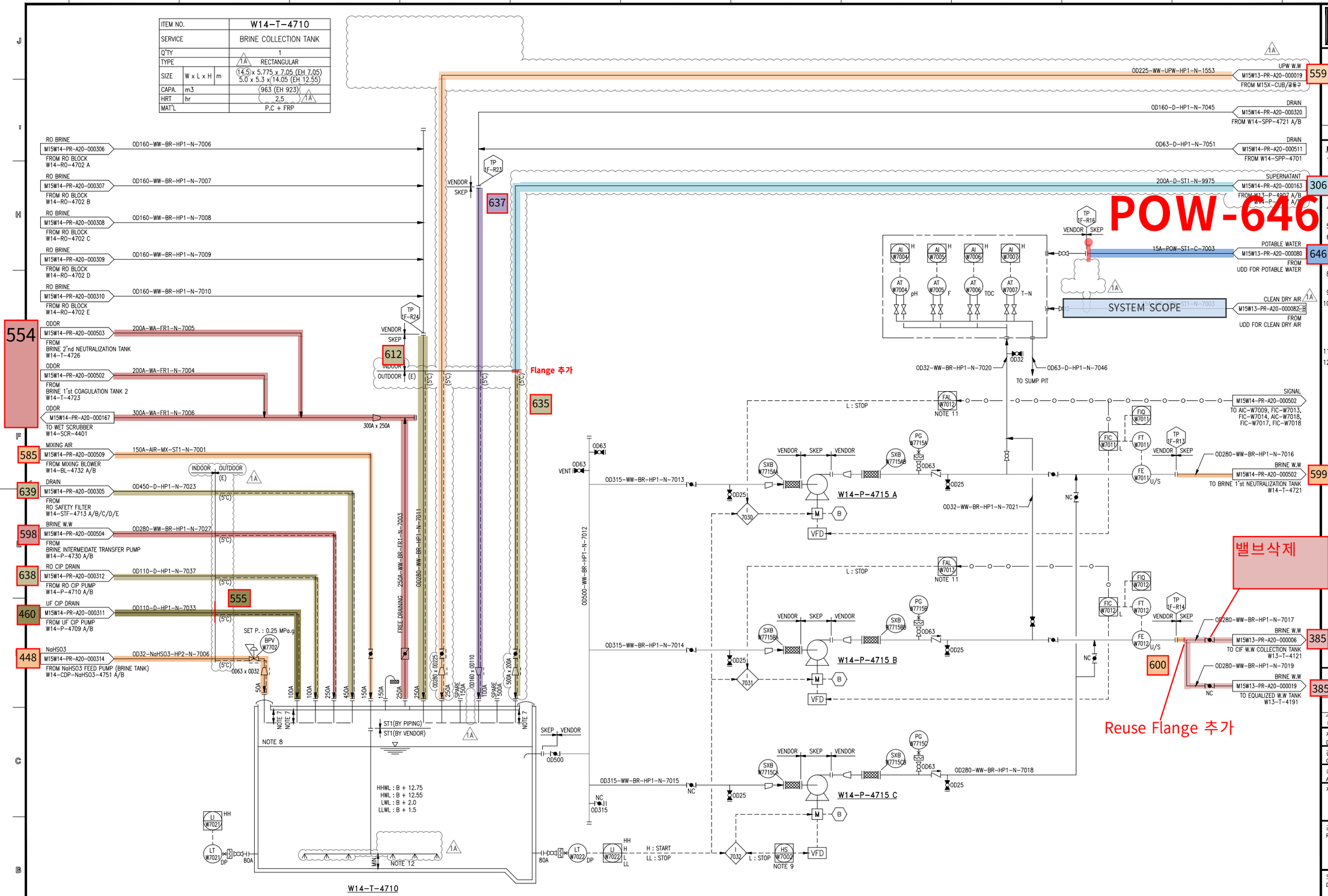

ITEM NO.		W14-P-4715 A/B/C
SERVICE		BRINE TRANSFER PUMP
Q'TY		2 + 1
TYPE		CENTRIFUGAL (VVVF)
CAPA.	m3/hr.ea x mH	250 x 30 (0.29MPa)
MAT'L		ALLOY20/ALLOY20
POWER	kW	(37)

대외비

KEY PLAN (1F)

NOTE

1. TANK의 HWL 이하로 연결되는 모든 배관은 BLOCK 밸브 설치할 것
2. 원수 인입지점은 펌프 흡입측에서 최대한 이격하여 설치
2m 이상 높은 곳에 설치된 밸브는 CHAIN VALVE 또는 PLATFORM 구성할 것
4. MANHOLE : 2개 이상 설치한다.
MANHOLE COVER : FRP
5. 운전시 CLOSE 되는 배관에는 LOTO 설치
6. CENTRIFUGAL PUMP
MAT'L 표기 : CASING / IMPELLER
7. TANK 내 유입, 육안 확인이 가능하고, 비산되지 않도록 최소 같이로 반영할 것 (SLAB 로 부터 100mm 탈이질 것)
8. 내부 FRP LINING TANK의 SLEEVE는 SUS304 + FRP LINING 적용.
9. FIC-W7011/W7012 중 선택운전.
10. INTERLOCK NO. I-7030/7031/7032 (W14-P-4715 A/B/C AUTO STOP)
: REMOTE STATUS에서 W14-T-4710 LEVEL (LI-W7022) LOW LOW STOP 또는 W14-P-4715 A/B DISCHARGE FLOW (FAL-W7011/W7012) LOW STOP.
11. BRINE TRANSFER PUMP RUN 후 30초 후 부터 동작한다.
12. DIFFUSER HOLE 및 배관내치의 관련된 상세 설계는 VENDOR가 수행한다.

수정 REV.	설 명 DESCRIPTION	날 짜 DATE
1A	REVISED AFC	25.08.14
1	REVISED AFC	25.01.17
0	APPROVAL FOR CONSTRUCTION	24.10.31

제 도 DRAWN BY	이 인 학
검 토 CHECKED BY	한 진 희
승 인 APPROVED BY	박 동 영
제 작 사	SK 에코플랜트
공 사 명 PROJECT TITLE	M15X Ph4 WWT Project
도면명 DWG. TITLE	PIPING & INSTRUMENT DIAGRAM BRINE COLLECTION TANK & TRANSFER PUMP
축 척 SCALE	NONE
날 짜 DATE	2025. 08. 14
PROJECT NO.	22330D
도면번호 SHEET NO.	CJ-M15W14-PR-A20-000501
REV.	1A

C:WUsersWTOPWDesktopWP&ID251013W[M15X Ph-4 for 인허가]CAD FILE_0910WCJ-M15W14-PR-A20-000501 R1 P&ID FOR BRINE

ITEM NO.		W14-T-4730
SERVICE		BRINE INTERMEDIATE TANK
Q'TY		1
TYPE		RECTANGULAR
SIZE	W x L x H m	8.1 x 3.075 x 7.45 (EH 5.5)
CAPA.	m3	(185.6)(EH 137)
HRT	hr	0.7
MAT'L		P.C + FRP

1A

POW-646

554 ODOR M15W14-PR-A20-000167 — 100A-WA-FR1-N-7020 — TO WET SCRUBBER W14-SCR-4401

603 BRINE W.W M15W14-PR-A20-000503 — OD400-WW-BR-HP1-N-7022 — GRAVITY FLOW — FROM BRINE 2'nd SETTLING TANK W14-T-4729

585 MIXING AIR M15W14-PR-A20-000509 — 50A-AIR-MX-ST1-N-7003 — FROM MIXING BLOWER W14-BL-4732 A/B

FREE DRAINING

BS W4710

ST1(BY PIPING) FR1(BY ARCH) 50A 400A 150A 100A SPARE SPARE 400A 400A NOTE 7

FR1(BY ARCH) ST1(BY VENDOR) NOTE 8

HHWL : B + 5.7
HWL : B + 5.5
LWL : B + 2.0
LLWL : B + 1.5

LI W7023 HH — LT W7023 DP — 80A — MIN — NOTE 11

W14-T-4730

OD355-WW-BR-HP1-N-7029 — SKEP VENDOR — OD355 — 80A — LT W7024 DP — LI W7024 HH H L LL — H : START LL : STOP — I 7035

OD315-WW-BR-HP1-N-7023 — 20A — VENDOR SKEP VENDOR — SXB W7730A — PG W7730A — SXB W7730AB — 50A — OD280-WW-BR-HP1-N-7025 — 20A — W14-P-4730 A — M B VFD

OD315-WW-BR-HP1-N-7024 — NC — 20A — VENDOR SKEP VENDOR — SXB W7730A — PG W7730B — SXB W7730BB — 50A — OD280-WW-BR-HP1-N-7026 — 20A — W14-P-4730 B — M B VFD

NC OD280

TP 1F-R19 VENDOR SKEP

AI W7020 H — AI W7021 H — AI W7022 H — AI W7023 H

AT W7020 pH — AT W7021 F — AT W7022 TOC — AT W7023 T-N

15A-POW-ST1-C-7004 — POTABLE WATER M15W13-PR-A20-000080 — FROM UDD FOR POTABLE WATER — 646

15A-AIR-DRY-ST1-N-7004 — CLEAN DRY AIR M15W13-PR-A20-000082 — FROM UDD FOR CLEAN DRY AIR — DEL

OD32 — OD32-WW-BR-HP1-N-7028 — OD63-D-HP1-N-7047 — TO W14-SU-4701

FAL W7018 NOTE 10 — L : STOP

SIGNAL M15W14-PR-A20-000505 — TO FIC-W7022

FIQ W7021 — SIGNAL M15W14-PR-A20-000505 — TO AIC-W7024, AIC-W7027

FIC W7021 L — FT W7021 — TP 1F-R17 VENDOR SKEP — FE W7021 U/S

BRINE W.W M15W14-PR-A20-000505 — TO BRINE MBR NEUTRALIZATION TANK W14-T-4731 — 598

OD280-WW-BR-HP1-N-7027 — NC — BRINE W.W M15W14-PR-A20-000501 — TO BRINE COLLECTION TANK W14-T-4710

대외비

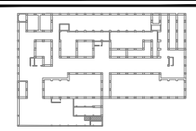

KEY PLAN (1F)

NOTE

1. TANK와 HWL 이하로 연결되는 모든 배관은 BLOCK 밸브 설치할 것
2. 원수 인입지점은 펌프 흡입측에서 최대한 이격하여 설치
3. 2m 이상 높은 곳에 설치된 밸브는 CHAIN VALVE 또는 PLATFORM 구성할 것
4. MANHOLE : 2개 이상 설치한다. MANHOLE COVER : FRP
5. 온전시 CLOSE 되는 배관에는 LOTO 설치
6. CENTRIFUGAL PUMP MAT'L 표기 : CASING / IMPELLER
7. TANK 내 유입, 육안 확인이 가능하고, 비산되지 않도록 최소 깊이로 반영할 것 (SLAB 로 부터 100mm 띄어질 것)
8. 내부 FRP LINING TANK의 SLEEVE는 SUS304 + FRP LINING 적용.
9. INTERLOCK NO. I-7035 (W14-P-4730 A/B AUTO STOP) : REMOTE STATUS에서 W14-T-4730 LEVEL (LI-W7024 LOW LOW STOP 또는 W14-P-4730 A/B DISCHARGE FLOW (FAL-W7021) LOW STOP.
10. BRINE INTERMEDIATE TRANSFER PUMP RUN 후 30초 후 부터 동작한다.
11. DIFFUSER HOLE 및 배관배치의 관련된 상세 설계는 VENDOR가 수행한다. 1A

ITEM NO.		W14-P-4730 A/B
SERVICE		BRINE INTERMEDIATE TRANSFER PUMP
Q'TY		1 + 1
TYPE		CENTRIFUGAL (VVVF)
CAPA.	m3/hr.ea x mH	250 x 30 (0.29MPa)
MAT'L		SSC13/SSC13
POWER	kW	37 1A

REV.	DESCRIPTION	DATE
1A	REVISED AFC	25.08.14
1	REVISED AFC	25.01.17
0	APPROVAL FOR CONSTRUCTION	24.10.31

제 도 DRAWN BY	이 인 학
검 토 CHECKED BY	한 진 희
승 인 APPROVED BY	박 동 영
제 작 사	SK 에코플랜트
공 사 명 PROJECT TITLE	M15X Ph4 WWT Project
도면명 DWG. TITLE	PIPING & INSTRUMENT DIAGRAM BRINE INTERMEDIATE TANK & TRANSFER PUMP
축 척 SCALE	NONE
날 짜 DATE	2025. 08. 14
PROJECT NO.	22330D
REV.	1A
도면번호 SHEET NO.	CJ-M15W14-PR-A20-000504

A1(594x841mm ±2mm)

C:₩Users₩TOPWDesktop₩P&ID251013₩[M15X Ph-4 for 인허가]CAD FILE_0910₩CJ-M15W14-PR-A20-000504 R1 P&ID FOR BRINE

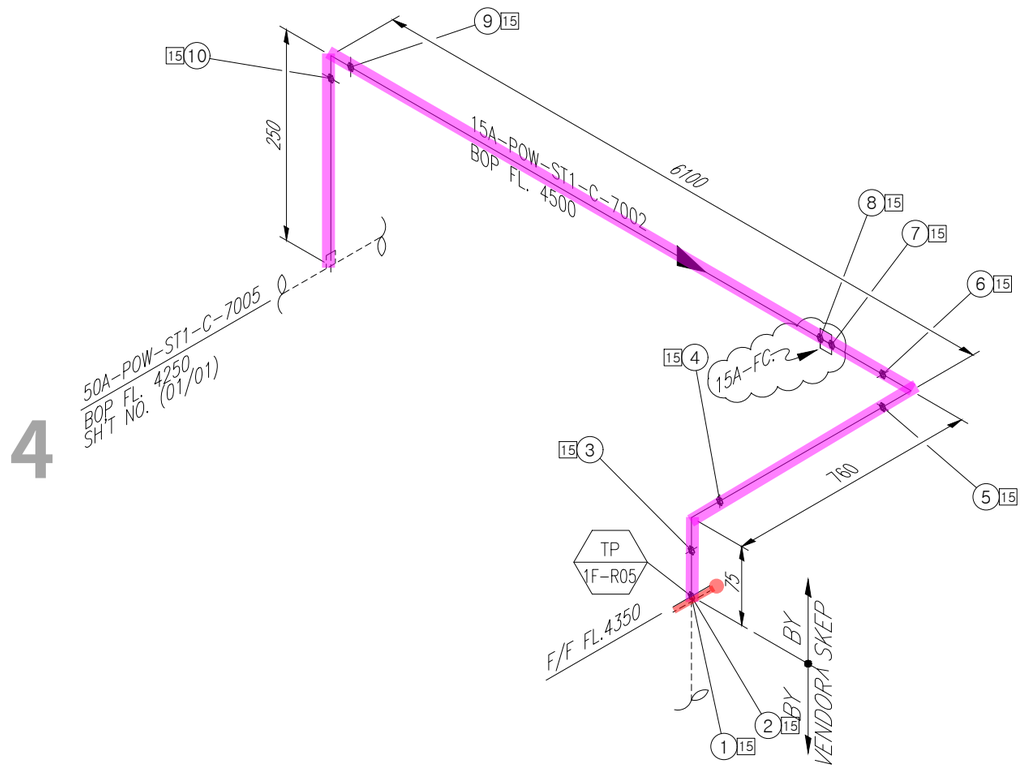

4

ITEM	SIZE	Q'TY	DESCRIPTION
		ST1	
P	15A	7.2M	PIPE, STS 304TP, ERW, PE – SCH 10S
E90	15A	3EA	ELBOW 90 DEG, STSF304, SW – SCH 10S
F	15A	1EA	FLG SO, KS 10K, RF, STS304
FC	15A	1EA	COUPLING FULL, STSF304, SW – SCH 10S

<NOTE>

1. (*) FIELD ADJUST

* PIPE : P/P1 * 90° ELBOW : E90 * 45° ELBOW : E45 * TEE : T * RED.TEE : TR * STUB-IN : STU * REINFORCING PAD : RP * CON.RED : RC * ECC.RED : RE * CON.SWAGE : RCS/RCS1 * ECC.SWAGE : RES/RES1 * NIPPLE : NP/NP1/NP2 * CAP : CAP/CAP1 * PLUG : PLG * FULL COUPLING : FC * HALF COUPLING : HF/HF1
* STUB-IN : STU * SOCKET(HDPE/PVC) : SC * SADDLE(HDPE) : SD * FLANGE : F/F1 * GASKET : G/G1/G2 * BOLT & NUT : B/B1 * BLIND FLANGE : FB/FB1 * GATE VA. : VG/VG1/VG2 * BALL VA. : VB/VBLO/VB1/VB1LO/VB2/VB2LO * BUTTERFLY VA. : VF/VF4 * CHECK VA. : VC/VC1/VC2/VC3/VC4/VC5/VC6/VC7
* GLOBE VA. : VL/VL1/VL2 * DIAPHRAGM VA. : VD/VDLO * DAMPER : VP * QUICK COUPLING : SQC * FLEXIBLE JOINT(STEEL) : FLXB * FLEXIBLE JOINT(RUBBER) : FLXR * FLEXIBLE JOINT(STEEL_PTFE LINED) : FLXL * FLEXIBLE HOSE : FLXH * STEAM TRAP : ST * SPRAY NOZZLE : SPN * EMERGENCY SHOWER : SSH
* STRAINER(Y-TYPE) : YSTR * STRAINER(T-TYPE) : TSTR * STRAINER(BUCKET-TYPE) : BSTR * ANCHOR PLATE : STOP * BIRD SCREEN : BS * ISOLATION KIT : IK * UNLOADING BOX : UB * AIR TRAP : AT * LOTO : LOTO * SIGHT GLASS : SG * PRESSURE GAUGE : PG * SHILED : SH * SPECIAL BOLT & NUT : BL/BL1

CLIENT SK hynix 1

INSULATION	CODE	C	CONDITION	PRESS. (kg/cm2g)	TEMP. (°C)
	THICK.	25	DESIGN	13	60
			OPERATING	10	AMB

AREA W14
UNIT R1FA
REF. PLAN DWG. CJ-M15W14-PI-A30-010017-B
REF. P & ID CJ-M15W13-PR-A20-000080

REV. NO.	DATE	DESCRIPTION	BY	CHK	APP'D
1	25.03.31	REVISED AS MARKED	황래종	안남후	박동영
0	25.01.24	APPROVED FOR CONSTRUCTION	황래종	안남후	박동영

CONTRACTOR SK ecoplant
PROJECT NAME M15X Ph4 Project
COMMODITY POW
JOB NO. 22330D
LINE NO. 15A-POW-ST1-C-7002
SH'T NO. 01 / 01
REV. 1

경고 : 본 도면은 SK HYNIX의 기업비밀 자료로서, 어떠한 경우에도 목적 외 사용, 복제, 제3자에게 공개, 누설 및 유출할 수 없으며, 회사는 유포자의 불법 사용으로 피해가 발생할 경우 유포자에게 민/형사상 책임을 요구할 수 있음.

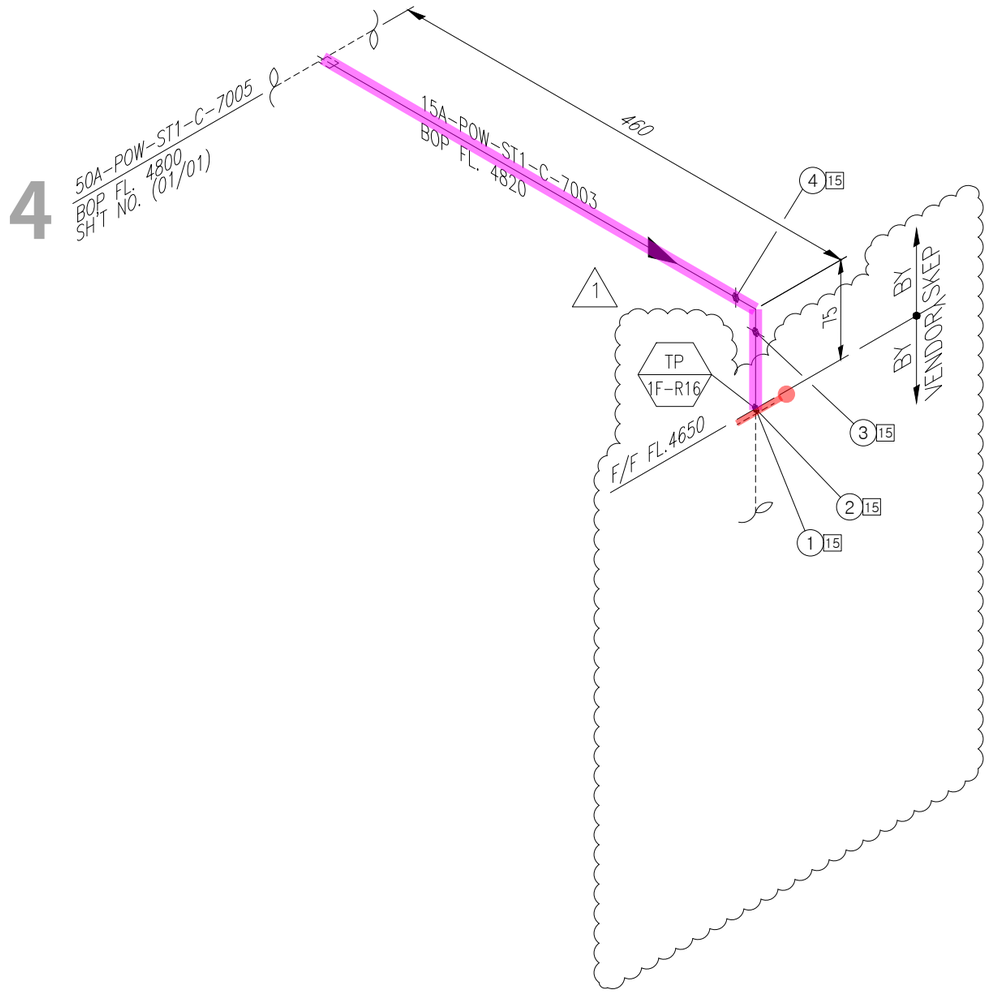

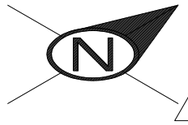

SK ecoplant

ITEM	SIZE	Q'TY	DESCRIPTION
		ST1	
P	15A	0.5M	PIPE, STS 304TP, ERW, PE – SCH 10S
E90	15A	1EA	ELBOW 90 DEG, STSF304, SW – SCH 10S
F	15A	1EA	FLG SO, KS 10K, RF, STS304

<NOTE>
1. (*) FIELD ADJUST

* PIPE : P/P1 * 90° ELBOW : E90 * 45° ELBOW : E45 * TEE : T * RED.TEE : TR * STUB-IN : STU * REINFORCING PAD : RP * CON.RED : RC * ECC.RED : RE * CON.SWAGE : RCS/RCS1 * ECC.SWAGE : RES/RES1 * NIPPLE : NP/NP1/NP2 * CAP : CAP/CAP1 * PLUG : PLG * FULL COUPLING : FC * HALF COUPLING : HF/HF1
* STUB-IN : STU * SOCKET(HDPE/PVC) : SC * SADDLE(HDPE) : SD * FLANGE : F/F1 * GASKET : G/G1/G2 * BOLT & NUT : B/B1 * BLIND FLANGE : FB/FB1 * GATE VA. : VG/VG1/VG2 * BALL VA. : VB/VBL0/VB1/VB1L0/VB2/VB2L0 * BUTTERFLY VA. : VF/VF4 * CHECK VA. : VC/VC1/VC2/VC3/VC4/VC5/VC6/VC7
* GLOBE VA. : VL/VL1/VL2 * DIAPHRAGM VA. : VD/VDL0 * DAMPER : VP * QUICK COUPLING : SQC * FLEXIBLE JOINT(STEEL) : FLXB * FLEXIBLE JOINT(RUBBER) : FLXR * FLEXIBLE JOINT(STEEL_PTFE LINED) : FLXL * FLEXIBLE HOSE : FLXH * STEAM TRAP : ST * SPRAY NOZZLE : SPN * EMERGENCY SHOWER : SSH
* STRAINER(Y-TYPE) : YSTR * STRAINER(T-TYPE) : TSTR * STRAINER(BUCKET-TYPE) : BSTR * ANCHOR PLATE : STOP * BIRD SCREEN : BS * ISOLATION KIT : IK * UNLOADING BOX : UB * AIR TRAP : AT * LOTO : LOTO * SIGHT GLASS : SG * PRESSURE GAUGE : PG * SHILED : SH * SPECIAL BOLT & NUT : BL/BL1

CLIENT SK hynix 2

INSULATION	CODE	C	CONDITION	PRESS. (kg/cm2g)	TEMP. (°C)
	THICK.	25	DESIGN	13	60
			OPERATING	10	AMB

AREA W14
UNIT R1FA
REF. PLAN DWG. CJ-M15W14-PI-A30-010017-A
REF. P & ID CJ-M15W13-PR-A20-000080

REV. NO.	DATE	DESCRIPTION	BY	CHK	APP'D
1	25.03.31	REVISED AS MARKED	황래종	안남후	박동영
0	25.01.24	APPROVED FOR CONSTRUCTION	황래종	안남후	박동영

CONTRACTOR SK ecoplant
PROJECT NAME M15X Ph4 Project
COMMODITY POW
JOB NO. 22330D
LINE NO. 15A-POW-ST1-C-7003
SH'T NO. 01 / 01
REV. 1

경고 : 본 도면은 SK HYNIX의 기업비밀 자료로서, 어떠한 경우에도 목적 외 사용, 복제, 제3자에게 공개, 누설 및 유출할 수 없으며, 회사는 유포자의 불법 사용으로 피해가 발생할 경우 유포자에게 민/형사상 책임을 요구할 수 있음.

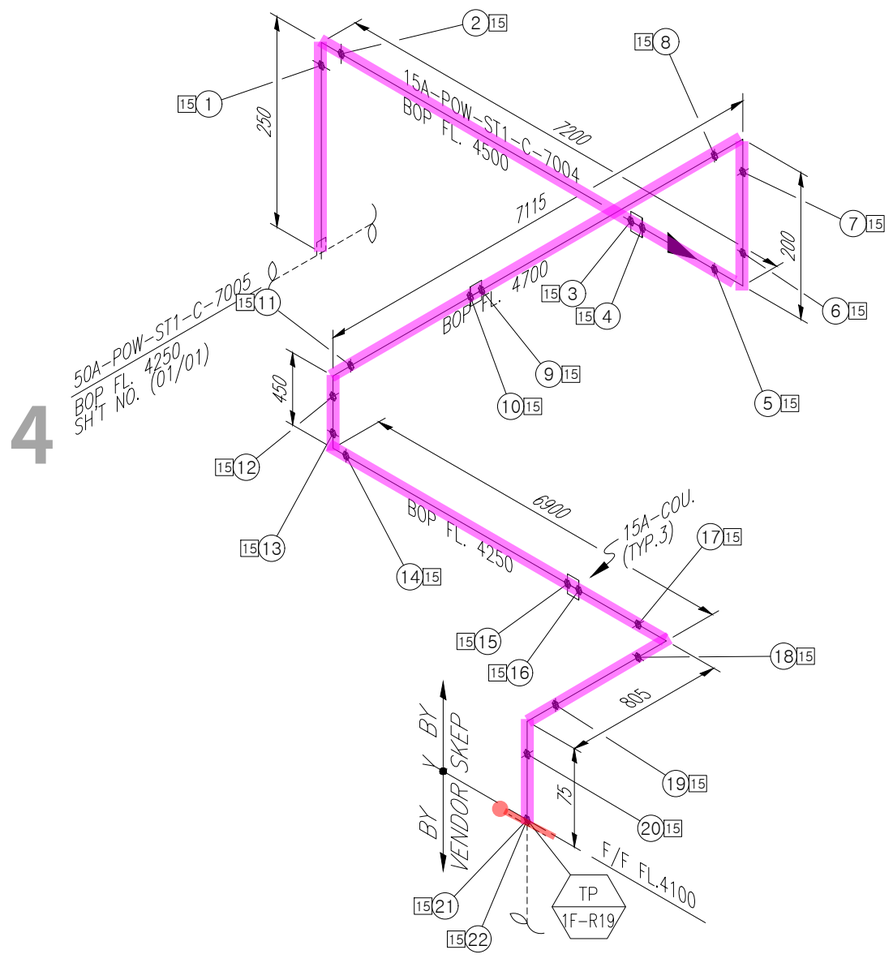

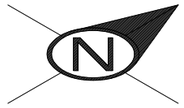

SK ecoplant

ITEM	SIZE	Q'TY	DESCRIPTION
		ST1	
P	15A	23.0M	PIPE, STS 304TP, ERW, PE – SCH 10S
E90	15A	7EA	ELBOW 90 DEG, STSF304, SW – SCH 10S
F	15A	1EA	FLG SO, KS 10K, RF, STS304
FC	15A	3EA	COUPLING FULL, STSF304, SW – SCH 10S

<NOTE>
1. (*) FIELD ADJUST

* PIPE : P/P1 * 90° ELBOW : E90 * 45° ELBOW : E45 * TEE : T * RED.TEE : TR * STUB-IN : STU * REINFORCING PAD : RP * CON.RED : RC * ECC.RED : RE * CON.SWAGE : RCS/RCS1 * ECC.SWAGE : RES/RES1 * NIPPLE : NP/NP1/NP2 * CAP : CAP/CAP1 * PLUG : PLG * FULL COUPLING : FC * HALF COUPLING : HF/HF1
* STUB-IN : STU * SOCKET(HDPE/PVC) : SC * SADDLE(HDPE) : SD * FLANGE : F/F1 * GASKET : G/G1/G2 * BOLT & NUT : B/B1 * BLIND FLANGE : FB/FB1 * GATE VA. : VG/VG1/VG2 * BALL VA. : VB/VBL0/VB1/VB1L0/VB2/VB2L0 * BUTTERFLY VA. : VF/VF4 * CHECK VA. : VC/VC1/VC2/VC3/VC4/VC5/VC6/VC7
* GLOBE VA. : VL/VL1/VL2 * DIAPHRAGM VA. : VD/VDL0 * DAMPER : VP * QUICK COUPLING : SQC * FLEXIBLE JOINT(STEEL) : FLXB * FLEXIBLE JOINT(RUBBER) : FLXR * FLEXIBLE JOINT(STEEL_PTFE LINED) : FLXL * FLEXIBLE HOSE : FLXH * STEAM TRAP : ST * SPRAY NOZZLE : SPN * EMERGENCY SHOWER : SSH
* STRAINER(Y-TYPE) : YSTR * STRAINER(T-TYPE) : TSTR * STRAINER(BUCKET-TYPE) : BSTR * ANCHOR PLATE : STOP * BIRD SCREEN : BS * ISOLATION KIT : IK * UNLOADING BOX : UB * AIR TRAP : AT * LOTO : LOTO * SIGHT GLASS : SG * PRESSURE GAUGE : PG * SHILED : SH * SPECIAL BOLT & NUT : BL/BL1

CLIENT SK hynix 3

INSULATION	CODE	C	CONDITION	PRESS. (kg/cm2g)	TEMP. (°C)
	THICK.	25	DESIGN	13	60
			OPERATING	10	AMB

AREA W14
UNIT R1FA
REF. PLAN DWG. CJ-M15W14-PI-A30-010018-A
REF. P & ID CJ-M15W13-PR-A20-000080

REV. NO.	DATE	DESCRIPTION	BY	CHK	APP'D
1	25.03.31	REVISED AS MARKED	황래종	안남후	박동영
0	25.01.24	APPROVED FOR CONSTRUCTION	황래종	안남후	박동영

CONTRACTOR SK ecoplant
PROJECT NAME M15X Ph4 Project
COMMODITY POW
JOB NO. 22330D
LINE NO. 15A-POW-ST1-C-7004
SH'T NO. 01 / 01
REV. 1

경고 : 본 도면은 SK HYNIX의 기업비밀 자료로서, 어떠한 경우에도 목적 외 사용, 복제, 제3자에게 공개, 누설 및 유출할 수 없으며, 회사는 유포자의 불법 사용으로 피해가 발생할 경우 유포자에게 민/형사상 책임을 요구할 수 있음.

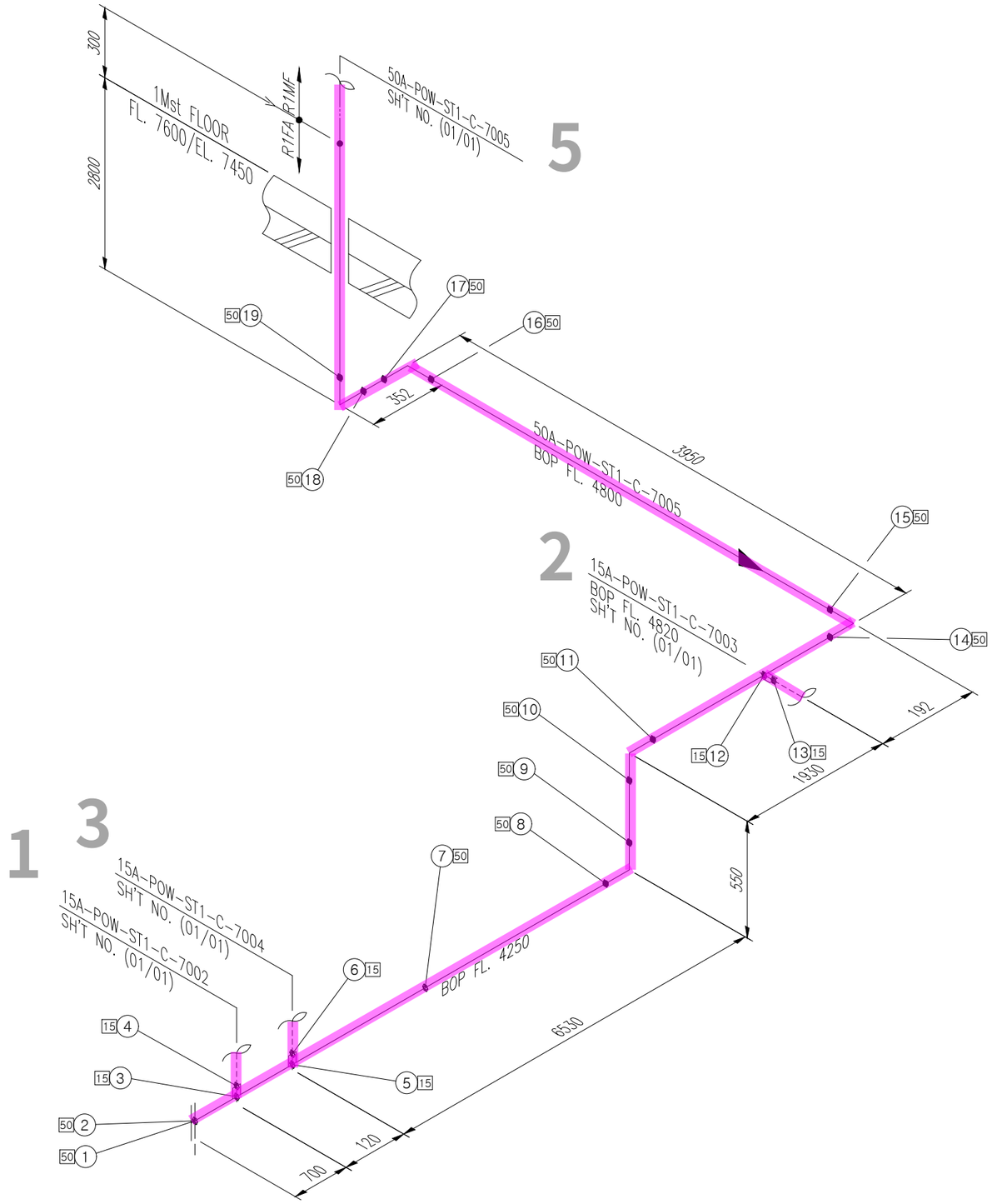

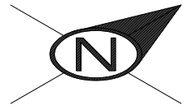

<NOTE>
1. (*) FIELD ADJUST

ITEM	SIZE	Q'TY	DESCRIPTION
		ST1	
P	50A	17.5M	PIPE, STS 304TP, ERW, BE – SCH 10S
E90	50A	5EA	ELBOW 90 DEG LR, STS304, ERW, BE – SCH 10S
HF	15A	3EA	COUPLING HALF, STSF304, SW – SCH 10S
F	50A	1EA	FLG SO, KS 10K, RF, STS304
FB	50A	1EA	FLG BLIND, KS 10K, RF, STS304
G	50A	1EA	GASKET, KS 10K, RF, PTFE+EPDM, 3.0MM TH'K
B	50A	1ST	MACHINE BOLT & NUTS :STS 304 / W WASHERS
IN	25tX50A	17.5M	관 보온재(고무발포)

* PIPE : P/P1 * 90° ELBOW : E90 * 45° ELBOW : E45 * TEE : T * RED.TEE : TR * STUB-IN : STU * REINFORCING PAD : RP * CON.RED : RC * ECC.RED : RE * CON.SWAGE : RCS/RCS1 * ECC.SWAGE : RES/RES1 * NIPPLE : NP/NP1/NP2 * CAP : CAP/CAP1 * PLUG : PLG * FULL COUPLING : FC * HALF COUPLING : HF/HF1
* STUB-IN : STU * SOCKET(HDPE/PVC) : SC * SADDLE(HDPE) : SD * FLANGE : F/F1 * GASKET : G/G1/G2 * BOLT & NUT : B/B1 * BLIND FLANGE : FB/FB1 * GATE VA. : VG/VG1/VG2 * BALL VA. : VB/VBL0/VB1/VB1L0/VB2/VB2L0 * BUTTERFLY VA. : VF/VF4 * CHECK VA. : VC/VC1/VC2/VC3/VC4/VC5/VC6/VC7
* GLOBE VA. : VL/VL1/VL2 * DIAPHRAGM VA. : VD/VDL0 * DAMPER : VP * QUICK COUPLING : SQC * FLEXIBLE JOINT(STEEL) : FLXB * FLEXIBLE JOINT(RUBBER) : FLXR * FLEXIBLE JOINT(STEEL_PTFE LINED) : FLXL * FLEXIBLE HOSE : FLXH * STEAM TRAP : ST * SPRAY NOZZLE : SPN * EMERGENCY SHOWER : SSH
* STRAINER(Y-TYPE) : YSTR * STRAINER(T-TYPE) : TSTR * STRAINER(BUCKET-TYPE) : BSTR * ANCHOR PLATE : STOP * BIRD SCREEN : BS * ISOLATION KIT : IK * UNLOADING BOX : UB * AIR TRAP : AT * LOTO : LOTO * SIGHT GLASS : SG * PRESSURE GAUGE : PG * SHILED : SH * SPECIAL BOLT & NUT : BL/BL1

CLIENT SK hynix 4

INSULATION	CODE	C	CONDITION	PRESS. (kg/cm2g)	TEMP. (°C)
	THICK.	25	DESIGN	13	60
			OPERATING	10	AMB

AREA W14
UNIT R1FA
REF. PLAN DWG. CJ-M15W14-PI-A30-010016-A
REF. P & ID CJ-M15W13-PR-A20-000080

REV. NO.	DATE	DESCRIPTION	BY	CHK	APP'D
0	25.01.24	APPROVED FOR CONSTRUCTION	황래종	안남후	박동영

CONTRACTOR SK ecoplant
PROJECT NAME M15X Ph4 Project
COMMODITY POW
JOB NO. 22330D
LINE NO. 50A-POW-ST1-C-7005
SH'T NO. 01 / 01
REV. 0

경고 : 본 도면은 SK HYNIX의 기업비밀 자료로서, 어떠한 경우에도 목적 외 사용, 복제, 제3자에게 공개, 누설 및 유출할 수 없으며, 회사는 유포자의 불법 사용으로 피해가 발생할 경우 유포자에게 민/형사상 책임을 요구할 수 있음.

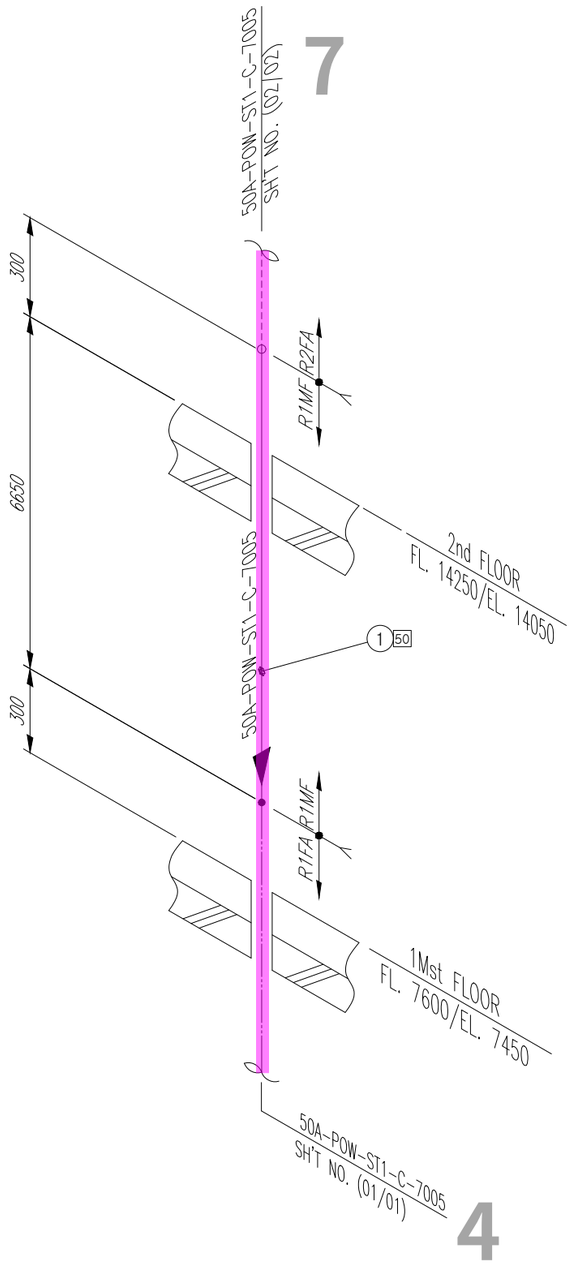

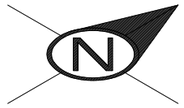

<NOTE>
1. (*) FIELD ADJUST

ITEM	SIZE	Q'TY	DESCRIPTION
		ST1	
P	50A	7.0M	PIPE, STS 304TP, ERW, BE - SCH 10S
IN	25tX50A	7.0M	관 보온재(고무발포)

* PIPE : P/P1 * 90° ELBOW : E90 * 45° ELBOW : E45 * TEE : T * RED.TEE : TR * STUB-IN : STU * REINFORCING PAD : RP * CON.RED : RC * ECC.RED : RE * CON.SWAGE : RCS/RCS1 * ECC.SWAGE : RES/RES1 * NIPPLE : NP/NP1/NP2 * CAP : CAP/CAP1 * PLUG : PLG * FULL COUPLING : FC * HALF COUPLING : HF/HF1
* STUB-IN : STU * SOCKET(HDPE/PVC) : SC * SADDLE(HDPE) : SD * FLANGE : F/F1 * GASKET : G/G1/G2 * BOLT & NUT : B/B1 * BLIND FLANGE : FB/FB1 * GATE VA. : VG/VG1/VG2 * BALL VA. : VB/VBL0/VB1/VB1L0/VB2/VB2L0 * BUTTERFLY VA. : VF/VF4 * CHECK VA. : VC/VC1/VC2/VC3/VC4/VC5/VC6/VC7
* GLOBE VA. : VL/VL1/VL2 * DIAPHRAGM VA. : VD/VDL0 * DAMPER : VP * QUICK COUPLING : SQC * FLEXIBLE JOINT(STEEL) : FLXB * FLEXIBLE JOINT(RUBBER) : FLXR * FLEXIBLE JOINT(STEEL_PTFE LINED) : FLXL * FLEXIBLE HOSE : FLXH * STEAM TRAP : ST * SPRAY NOZZLE : SPN * EMERGENCY SHOWER : SSH
* STRAINER(Y-TYPE) : YSTR * STRAINER(T-TYPE) : TSTR * STRAINER(BUCKET-TYPE) : BSTR * ANCHOR PLATE : STOP * BIRD SCREEN : BS * ISOLATION KIT : IK * UNLOADING BOX : UB * AIR TRAP : AT * LOTO : LOTO * SIGHT GLASS : SG * PRESSURE GAUGE : PG * SHILED : SH * SPECIAL BOLT & NUT : BL/BL1

CLIENT
SK hynix
5

INSULATION	CODE	C	CONDITION	PRESS. (kg/cm2g)	TEMP. (°C)
	THICK.	25	DESIGN	13	60
			OPERATING	10	AMB

AREA W14
UNIT R1MF
REF. PLAN DWG. CJ-M15W14-PI-A30-010017-D
REF. P & ID CJ-M15W13-PR-A20-000080

REV. NO.	DATE	DESCRIPTION	BY	CHK	APP'D
0	25.01.24	APPROVED FOR CONSTRUCTION	황래종	안남후	박동영

CONTRACTOR SK ecoplant
PROJECT NAME M15X Ph4 Project
COMMODITY POW
JOB NO. 22330D
LINE NO. 50A-POW-ST1-C-7005
SH'T NO. 01 / 01
REV. 0

경고 : 본 도면은 SK HYNIX의 기업비밀 자료로서, 어떠한 경우에도 목적 외 사용, 복제, 제3자에게 공개, 누설 및 유출할 수 없으며, 회사는 유포자의 불법 사용으로 피해가 발생할 경우 유포자에게 민/형사상 책임을 요구할 수 있음.

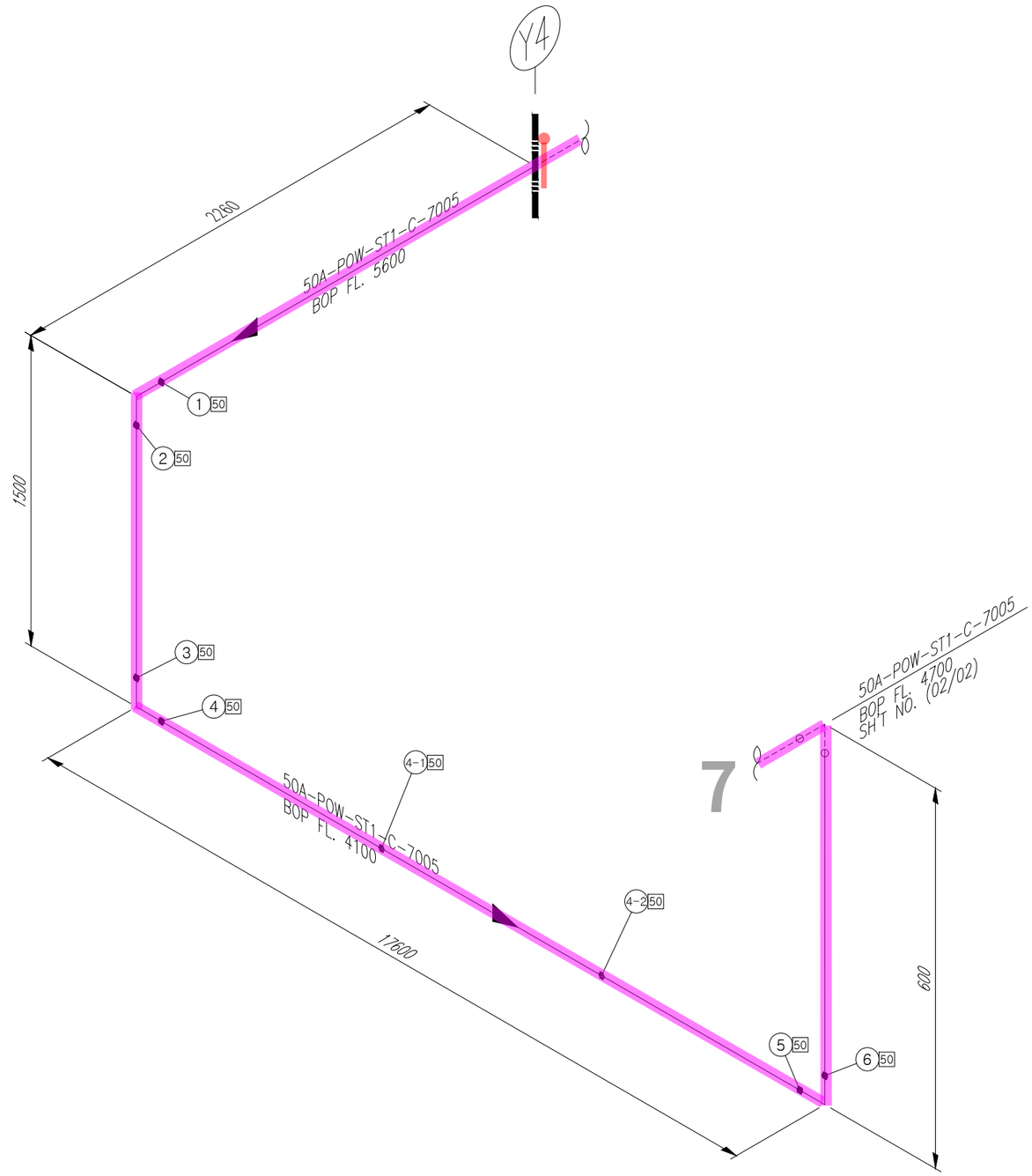

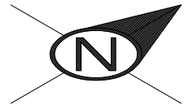

SK ecoplant

ITEM	SIZE	Q'TY	DESCRIPTION
		ST1	
P	50A	22.0M	PIPE, STS 304TP, ERW, BE – SCH 10S
E90	50A	3EA	ELBOW 90 DEG LR, STS304, ERW, BE – SCH 10S
IN	25tX50A	22.0M	관 보온재(고무발포)

<NOTE>
1. (*) FIELD ADJUST

* PIPE : P/P1 * 90° ELBOW : E90 * 45° ELBOW : E45 * TEE : T * RED.TEE : TR * STUB-IN : STU * REINFORCING PAD : RP * CON.RED : RC * ECC.RED : RE * CON.SWAGE : RCS/RCS1 * ECC.SWAGE : RES/RES1 * NIPPLE : NP/NP1/NP2 * CAP : CAP/CAP1 * PLUG : PLG * FULL COUPLING : FC * HALF COUPLING : HF/HF1
* STUB-IN : STU * SOCKET(HDPE/PVC) : SC * SADDLE(HDPE) : SD * FLANGE : F/F1 * GASKET : G/G1/G2 * BOLT & NUT : B/B1 * BLIND FLANGE : FB/FB1 * GATE VA. : VG/VG1/VG2 * BALL VA. : VB/VBL0/VB1/VB1L0/VB2/VB2L0 * BUTTERFLY VA. : VF/VF4 * CHECK VA. : VC/VC1/VC2/VC3/VC4/VC5/VC6/VC7
* GLOBE VA. : VL/VL1/VL2 * DIAPHRAGM VA. : VD/VDL0 * DAMPER : VP * QUICK COUPLING : SQC * FLEXIBLE JOINT(STEEL) : FLXB * FLEXIBLE JOINT(RUBBER) : FLXR * FLEXIBLE JOINT(STEEL_PTFE LINED) : FLXL * FLEXIBLE HOSE : FLXH * STEAM TRAP : ST * SPRAY NOZZLE : SPN * EMERGENCY SHOWER : SSH
* STRAINER(Y-TYPE) : YSTR * STRAINER(T-TYPE) : TSTR * STRAINER(BUCKET-TYPE) : BSTR * ANCHOR PLATE : STOP * BIRD SCREEN : BS * ISOLATION KIT : IK * UNLOADING BOX : UB * AIR TRAP : AT * LOTO : LOTO * SIGHT GLASS : SG * PRESSURE GAUGE : PG * SHILED : SH * SPECIAL BOLT & NUT : BL/BL1

CLIENT SK hynix 6

INSULATION	CODE	C	CONDITION	PRESS. (kg/cm2g)	TEMP. (°C)
	THICK.	25	DESIGN	13	60
			OPERATING	10	AMB

AREA W14
UNIT R2FA
REF. PLAN DWG. CJ-M15W14-PI-A30-020014-C
REF. P & ID CJ-M15W13-PR-A20-000080

REV. NO.	DATE	DESCRIPTION	BY	CHK	APP'D
0	25.01.24	APPROVED FOR CONSTRUCTION	황래종	안남후	박동영

CONTRACTOR SK ecoplant
PROJECT NAME M15X Ph4 Project
COMMODITY POW
JOB NO. 22330D
LINE NO. 50A-POW-ST1-C-7005
SH'T NO. 01 / 02
REV. 0

경고 : 본 도면은 SK HYNIX의 기업비밀 자료로서, 어떠한 경우에도 목적 외 사용, 복제, 제3자에게 공개, 누설 및 유출할 수 없으며, 회사는 유포자의 불법 사용으로 피해가 발생할 경우 유포자에게 민/형사상 책임을 요구할 수 있음.

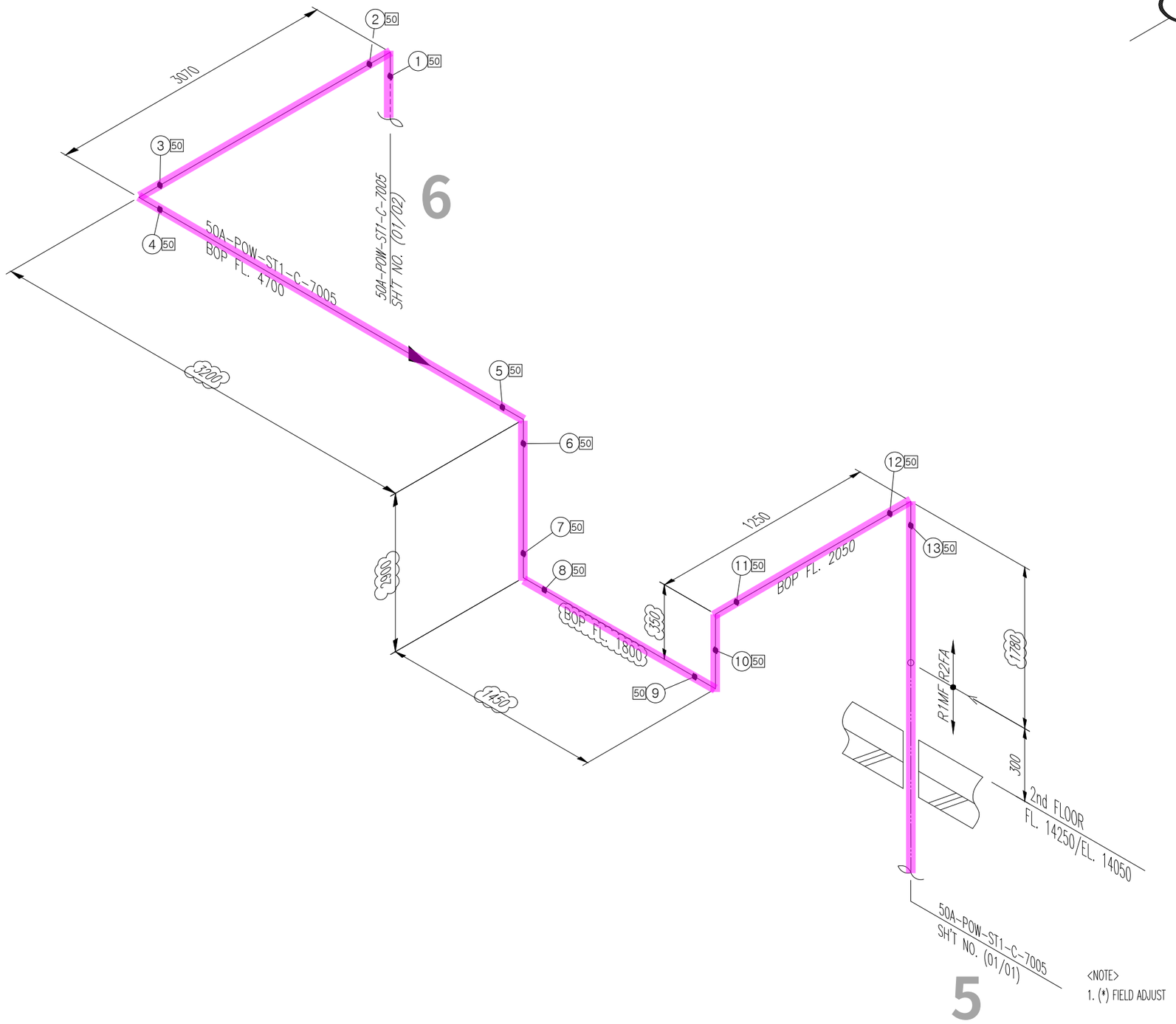

<NOTE>
1. (*) FIELD ADJUST

ITEM	SIZE	Q'TY	DESCRIPTION
		ST1	
P	50A	13.7M	PIPE, STS 304TP, ERW, BE – SCH 10S
E90	50A	7EA	ELBOW 90 DEG LR, STS304, ERW, BE – SCH 10S
IN	25tX50A	13.7M	관 보온재(고무발포)

* PIPE : P/P1 * 90° ELBOW : E90 * 45° ELBOW : E45 * TEE : T * RED.TEE : TR * STUB-IN : STU * REINFORCING PAD : RP * CON.RED : RC * ECC.RED : RE * CON.SWAGE : RCS/RCS1 * ECC.SWAGE : RES/RES1 * NIPPLE : NP/NP1/NP2 * CAP : CAP/CAP1 * PLUG : PLG * FULL COUPLING : FC * HALF COUPLING : HF/HF1
* STUB-IN : STU * SOCKET(HDPE/PVC) : SC * SADDLE(HDPE) : SD * FLANGE : F/F1 * GASKET : G/G1/G2 * BOLT & NUT : B/B1 * BLIND FLANGE : FB/FB1 * GATE VA. : VG/VG1/VG2 * BALL VA. : VB/VBL0/VB1/VB1L0/VB2/VB2L0 * BUTTERFLY VA. : VF/VF4 * CHECK VA. : VC/VC1/VC2/VC3/VC4/VC5/VC6/VC7
* GLOBE VA. : VL/VL1/VL2 * DIAPHRAGM VA. : VD/VDL0 * DAMPER : VP * QUICK COUPLING : SQC * FLEXIBLE JOINT(STEEL) : FLXB * FLEXIBLE JOINT(RUBBER) : FLXR * FLEXIBLE JOINT(STEEL_PTFE LINED) : FLXL * FLEXIBLE HOSE : FLXH * STEAM TRAP : ST * SPRAY NOZZLE : SPN * EMERGENCY SHOWER : SSH
* STRAINER(Y-TYPE) : YSTR * STRAINER(T-TYPE) : TSTR * STRAINER(BUCKET-TYPE) : BSTR * ANCHOR PLATE : STOP * BIRD SCREEN : BS * ISOLATION KIT : IK * UNLOADING BOX : UB * AIR TRAP : AT * LOTO : LOTO * SIGHT GLASS : SG * PRESSURE GAUGE : PG * SHILED : SH * SPECIAL BOLT & NUT : BL/BL1

CLIENT SK hynix 7

INSULATION	CODE	C	CONDITION	PRESS. (kg/cm2g)	TEMP. (°C)
	THICK.	25	DESIGN	13	60
			OPERATING	10	AMB

AREA W14
UNIT R2FA
REF. PLAN DWG. CJ-M15W14-PI-A30-020014-A
REF. P & ID CJ-M15W13-PR-A20-000080

REV. NO.	DATE	DESCRIPTION	BY	CHK	APP'D
0	25.01.24	APPROVED FOR CONSTRUCTION	황래종	안남후	박동영

CONTRACTOR SK ecoplant
PROJECT NAME M15X Ph4 Project
COMMODITY POW
JOB NO. 22330D
LINE NO. 50A-POW-ST1-C-7005
SH'T NO. 02 / 02
REV. 0

경고 : 본 도면은 SK HYNIX의 기업비밀 자료로서, 어떠한 경우에도 목적 외 사용, 복제, 제3자에게 공개, 누설 및 유출할 수 없으며, 회사는 유포자의 불법 사용으로 피해가 발생할 경우 유포자에게 민/형사상 책임을 요구할 수 있음.

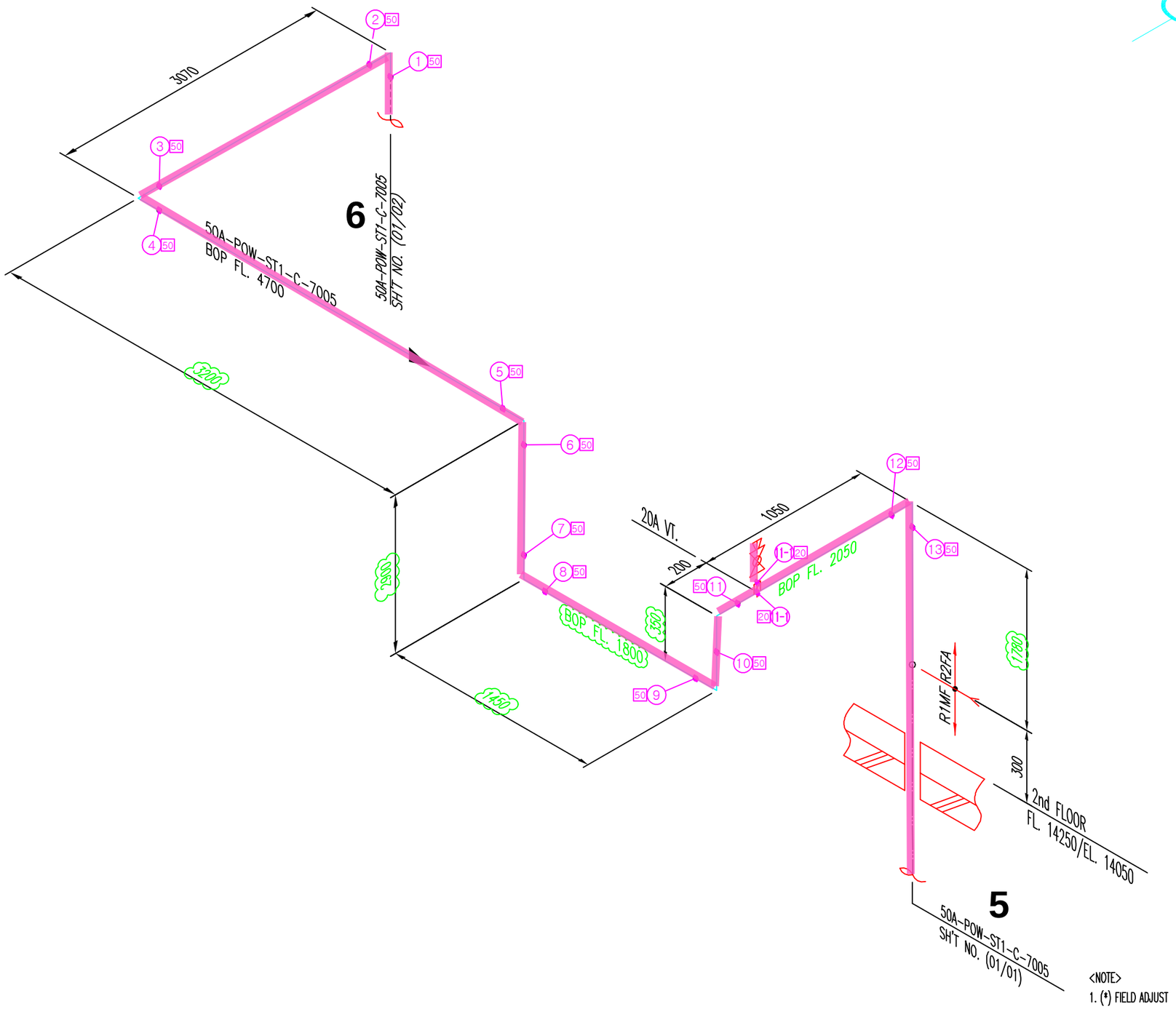

<NOTE>
1. (*) FIELD ADJUST

ITEM	SIZE	Q'TY	DESCRIPTION
		ST1	
P	50A	13.7M	PIPE, STS 304TP, ERW, BE - SCH 10S
E90	50A	7EA	ELBOW 90 DEG LR, STS304, ERW, BE - SCH 10S
IN	25tX50A	13.7M	관 보온재(고무발포)
NP1	20A	1EA	NIPPLE, STS 304TP, ERW, T0E - SCH 40S
VB1	20A	1EA	BALL VALVE, KS 10K, SCR'D, BODY-STSF304 / TRIM-STS304 / SEAT-PTFE, FB, LEVER
PLG	20A	1EA	PLUG ROUND HEAD, STSF304, SCR'D

* PIPE : P/P1 * 90° ELBOW : E90 * 45° ELBOW : E45 * TEE : T * RED.TEE : TR * STUB-IN : STU * REINFORCING PAD : RP * CON.RED : RC * ECC.RED : RE * CON.SWAGE : RCS/RCS1 * ECC.SWAGE : RES/RES1 * NIPPLE : NP/NP1/NP2 * CAP : CAP/CAP1 * PLUG : PLG * FULL COUPLING : FC * HALF COUPLING : HF/HF1
* STUB-IN : STU * SOCKET(HDPE/PVC) : SC * SADDLE(HDPE) : SD * FLANGE : F/F1 * GASKET : G/G1/G2 * BOLT & NUT : B/B1 * BLIND FLANGE : FB/FB1 * GATE VA. : VG/VG1/VG2 * BALL VA. : VB/VBLO/VB1/VB1LO/VB2/VB2LO * BUTTERFLY VA. : VF/VF4 * CHECK VA. : VC/VC1/VC2/VC3/VC4/VC5/VC6/VC7
* GLOBE VA. : VL/VL1/VL2 * DIAPHRAGM VA. : VD/VDLO * DAMPER : VP * QUICK COUPLING : SQC * FLEXIBLE JOINT(STEEL) : FLXB * FLEXIBLE JOINT(RUBBER) : FLXR * FLEXIBLE JOINT(STEEL_PTFE LINED) : FLXL * FLEXIBLE HOSE : FLXH * STEAM TRAP : ST * SPRAY NOZZLE : SPN * EMERGENCY SHOWER : SSH
* STRAINER(Y-TYPE) : YSTR * STRAINER(T-TYPE) : TSTR * STRAINER(BUCKET-TYPE) : BSTR * ANCHOR PLATE : STOP * BIRD SCREEN : BS * ISOLATION KIT : IK * UNLOADING BOX : UB * AIR TRAP : AT * LOTO : LOTO * SIGHT GLASS : SG * PRESSURE GAUGE : PG * SHILED : SH * SPECIAL BOLT & NUT : BL/BL1

CLIENT: SK hynix

7

INSULATION	CODE	C	CONDITION	PRESS. (kg/cm2g)	TEMP. (°C)	AREA	W14
	THICK.	25	DESIGN	13	60	UNIT	R2FA
			OPERATING	10	AMB	REF. PLAN DWG.	CJ-M15W14-PI-A30-020014-A
						REF. P & ID	CJ-M15W13-PR-A20-000080

REV. NO.	DATE	DESCRIPTION	BY	CHK	APP'D
0	25.01.24	APPROVED FOR CONSTRUCTION	황래종	안남후	박동영

CONTRACTOR: SK ecoplant
COMMODITY: POW
LINE NO.: 50A-POW-ST1-C-7005
PROJECT NAME: M15X Ph4 Project
JOB NO.: 22330D
SH'T NO.: 02 / 02
REV.: 0